Quilt

HEAT PUMP SYSTEM

User Manual

User Manual Version 3.2

Table of Contents

Privacy 6

Safety 8
Warning 9
Avertissement (Français) 13
Caution 17
Description of Pictograms 18

Parts Description 20
Quilt Indoor Unit & Front Cover 22
Quilt Outdoor Unit 24
Quilt Sense 26
Quilt Dial 27

System Overview 28
How a Heat Pump Works 29
Indoor Unit 32
Outdoor Unit 36
Quilt Dial 37

Parts Installation 38
How to Remove and Install Filters on the Indoor Unit 40
How to Remove and Install the Front Cover 44
How to Remove and Install the Quilt Sense 48
How to Install the Quilt Dial 52
Placing the Dial 53
Powering the Dial 54
Wall Mounting the Dial 56

Setup and Pairing 64
Download the Mobile Apps 65
Adding the Indoor Unit to the Quilt App 66
Adding the Dial 67
Setting Up Auto-Away 68

Operations 70
How to Power the Heat Pump System 71
Using Your Quilt 73
The Basics 74
Manually Controlling Your Quilt System 76
If a Room Is Offline 77
Light Bar 78
How to Restart the Dial 79
How to Factory Reset the Dial 81
How to Reset the Quilt Sense 81
How to Factory Reset the Quilt Sense 81

Maintenance and Cleaning 82
How to Clean the Indoor Unit Filters 84
How to Clean the Outside of the Indoor Unit and Front Cover 84
How to Clean the Outdoor Unit 85
How to Clean the Dial 86

Troubleshooting 88

Specifications 92
System Performance 93
Additional Safety Certifications 95
System Specs 95

Dimensions and Clearances 100
Indoor Unit 101
Quilt Sense 102
Outdoor Unit 103
Dial 104

Compliance 106

Privacy

Transparency and data security are fundamental to everything we do. We are committed to providing clear and concise information about how we utilize your data. We will always obtain your consent before sharing any personally identifiable information, such as your email address. We work hard to ensure the protection of your data. To learn more about our Privacy Policy, go to quilt.com/privacy-notice

Safety

Warning

- The only approved refrigerant for the Quilt Heat Pump System is R-32. R-32 is an odorless gas at room temperature. R-32 has a flammability rating of A2L, which signifies that it is non-toxic and mildly flammable (less than 10 cm of flame propagation per second). Please take all necessary measures to avoid exposing any part of the equipment to a direct flame.
- Installation of the appliance shall only be conducted by a qualified professional service technician unless otherwise stated in this manual. Please follow all precautions in the following sections during installation.
- Please only perform the maintenance listed in this manual. During maintenance and cleaning, you may be exposed to hazards including electricity, flammable gas under pressure, and sharp edges if the instructions in this manual are not followed. All other maintenance and repair should be conducted by a qualified professional service technician.
- This appliance is not intended for use by persons (including children) with reduced physical, sensory, or mental capabilities, or lack of experience and knowledge, unless they have been given supervision or instruction concerning use of the appliance by a person responsible for their safety.
- Children should be supervised to ensure that they do not play with the appliance.
- The refrigerant lines and other parts of the refrigerant circuit can get very hot. The insulation on any wire that is run next to the refrigerant lines must be rated to 230°F (110°C) or higher.

- Only the outdoor unit, refrigerant lines, and outdoor-to-indoor unit interconnect wire are rated for outdoor use. The indoor unit may only be installed indoors.
- The Quilt Indoor Unit requires a space of 8.5 x 38” (22 x 97 cm) on the wall with a minimum of 6” (15 cm) on the sides, a minimum of 2.5” (6.4 cm) to the ceiling and a minimum of 6’ (183 cm) from the bottom of the unit to the floor.
- The Quilt Outdoor Unit requires an outdoor space of 38.2” x 17.3” x 27.6” (97 x 44 x 70 cm) with a minimum of 4” (10 cm) of clearance in the back, 20” (51 cm) in the front, 12” (30 cm) on the top, 4” (10 cm) on the left side, and 10” (26 cm) on the right side without any obstructions.
- The Quilt Indoor Unit must be installed at least 3 feet away from a smoke detector.

Your qualified professional service technician will ensure the following requirements are met:

- The Quilt Indoor Unit must be installed using the supplied bracket. The bracket will be affixed to the wall via a minimum of seven drywall anchors rated for a load of 10 lbs (4.5 kg) each, seven #8, 1¼” wood screws into a wooden stud, joist, or a combination of the two.
- The Quilt Outdoor Unit must be anchored to a concrete pad, elevated base, or a metal wall bracket using anchors with a minimum pull-out force of 150 lbs (68 kg).
- The Quilt system must be installed according to the NEC (USA) or CEC (Canada).

- The Quilt Outdoor Unit does not come with a disconnecting cord. Thus a disconnect switch or SWD/HID breaker rated for Category III - 300V, 4000V overvoltage transient needs to be installed to protect your home and your equipment.
- The Quilt Outdoor Unit will be connected directly to your electrical panel. A single phase 208 or 240 Volt circuit breaker rated to a minimum of 20A and maximum of 25A is required. The indoor unit is powered from the outdoor unit via an interconnect wire. This wire is run inside the refrigeration lineset cover along with the refrigerant lines. Your service technician will perform the electrical connections to your panel as well as in between the indoor and outdoor units.

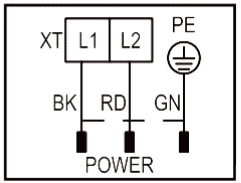

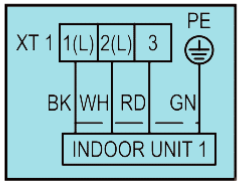

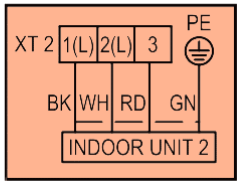

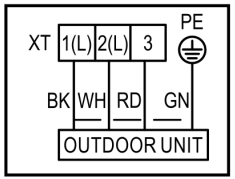

Above:
Wiring Diagram:
Outdoor Unit

Right:
Wiring Diagram:
Indoor Unit

- The Quilt Outdoor Unit comes pre-charged with 3.2 lbs (1450 grams) of R-32 refrigerant. However, in some installations additional refrigerant must be added to the refrigerant lines after the indoor and outdoor units are connected together. This refrigerant is charged via the charging port, which is located on the bottom of the outdoor unit underneath the refrigerant line cover. The total amount of refrigerant must not exceed 4 lbs (1800 grams). Your service technician will complete this step and write the total amount of refrigerant on the outdoor unit label.

Avertissement (Français)

- Le seul réfrigérant approuvé pour le système de pompe à chaleur Quilt est le R-32. Le réfrigérant est inflammable et inodore. L'indice d'inflammabilité du réfrigérant est tel que le risque d'incendie est faible. Veuillez toutefois prendre toutes les mesures nécessaires pour éviter d'exposer une quelconque partie de l'équipement à une flamme directe.
- L'installation de l'appareil doit être effectuée uniquement par un technicien de service professionnel qualifié, sauf indication contraire dans ce manuel. Veuillez suivre toutes les précautions décrites dans les sections suivantes lors de l'installation.
- Veuillez effectuer uniquement les opérations de maintenance répertoriées dans ce manuel. Pendant l'entretien et le nettoyage, vous pouvez être exposé à des dangers, notamment à l'électricité, à des gaz inflammables sous pression et à des arêtes vives si les instructions de ce manuel ne sont pas suivies. Veuillez effectuer uniquement l'entretien répertorié dans ce manuel. Tous les autres travaux d'entretien et de réparation doivent être effectués par un technicien de service professionnel qualifié.
- Cet appareil n'est pas destiné à être utilisé par des personnes (y compris des enfants) ayant des capacités physiques, sensorielles ou mentales réduites, ou un manque d'expérience et de connaissances, à moins qu'elles n'aient été supervisées ou aient reçu des instructions concernant l'utilisation de l'appareil par une personne responsable de leur sécurité.
- Les enfants doivent être surveillés pour s'assurer qu'ils ne jouent pas avec les appareils.

- L'unité intérieure Quilt nécessite un espace de 8,5 x 38" (22 x 97 cm) sur le mur avec un minimum de 6" (15 cm) sur les côtés, un minimum de 2,5" (6,4 cm) au et un minimum de 6' (183 cm) du bas de l'unité au sol.
- L'unité extérieure Quilt nécessite un espace extérieur de 38,2 x 17,3 x 27,6" (97 x 44 x 70 cm) avec un minimum de 4" (10 cm) d'espace libre à l'arrière, 20" (51 cm) à l'avant, 12" (30 cm) sur le dessus, 4" (10 cm) sur le côté gauche et 10" (26 cm) sur le côté droit sans aucune obstruction.
- L'unité intérieure Quilt doit être à au moins 3 pieds d'un détecteur de fumée.

Votre technicien de service professionnel qualifié veillera à ce que les exigences suivantes soient respectées:

- L'unité intérieure Quilt doit être installée à l'aide du support fourni. Le support sera fixé au mur via un minimum de sept ancrages pour cloisons sèches évalués pour une charge de 10 lb (4,5 kg) chacun, sept vis à bois n° 8 de 1¼" dans un montant ou une solive en bois ou une combinaison des deux.
- L'unité extérieure Quilt doit être ancrée à une dalle de béton, une base surélevée ou un support mural en métal à l'aide d'ancrages avec une force d'extraction minimale de 150 lb (68 kg).
- L'appareil doit être installé conformément au NEC (USA) ou au CEC (Canada).

- L'unité extérieure Quilt n'est pas livrée avec un cordon de déconnexion. Ainsi, un interrupteur de déconnexion ou un disjoncteur SWD/HID classé pour les transitoires de surtension de catégorie III - 300 V, 4 000 V doit être installé pour protéger votre maison et votre équipement.
- L'unité extérieure sera connectée directement à votre panneau électrique. Un disjoncteur monophasé de 208 ou 240 volts évalué à un minimum de 20 A et un maximum de 25 A est requis. L'unité intérieure est alimentée par l'unité extérieure via un fil d'interconnexion. Ce fil passe à l'intérieur du couvercle des conduites de réfrigération avec les conduites de réfrigérant. Votre technicien de service effectuera les connexions électriques à votre panneau ainsi qu'entre l'unité intérieure et extérieure.

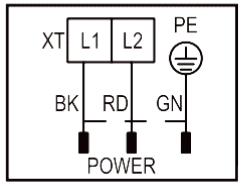

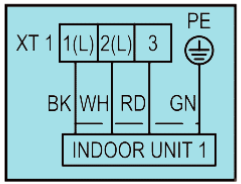

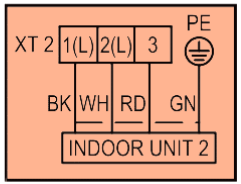

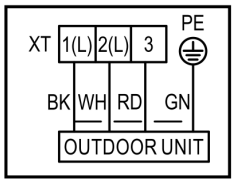

Au-dessus de:
Schéma de câblage : unité extérieure

Droit:
Schéma de câblage : unité intérieure

- L'unité extérieure Quilt est préchargée avec 1 450 grammes (3,2 lb) de réfrigérant R-32. Cependant, dans certaines installations, du réfrigérant supplémentaire doit être ajouté aux conduites de réfrigérant après le raccordement des unités intérieure et extérieure. Ce réfrigérant est chargé via le port de charge, qui se trouve au bas de l'unité extérieure, sous le couvercle de la conduite de réfrigérant. La quantité totale de réfrigérant ne doit pas dépasser 1 800 grammes (4 lb). Votre technicien de service effectuera cette étape et inscrira la quantité totale de réfrigérant sur l'étiquette de l'unité extérieure.

Caution

- Do not turn the circuit breaker off during operation. This may create an arc flash, which can lead to a fire. Only attempt to turn the breaker off after the indoor unit is switched off using the app or Dial.
- Do not insert any object or body part into the air inlet or outlet. This may cause injury, as the fan inside rotates at high speed during operation.
- In case of abnormal operation, such as a burning smell, power off the heat pump and turn the breaker off. Continued operation in the abnormal state may cause damage to the equipment, fire, or electric shock. Contact support@quilt.com or call 650-423-1111.
- When the heat pump does not cool or heat, you may have a refrigerant leak. Turn the heat pump off and call a certified technician for repair.
- You should never attempt to clean the inside of the indoor unit. Should the inside of the unit require cleaning (such as the cooling fins on the heat exchanger), contact support@quilt.com or call 650-423-1111.
- Using harsh chemicals to clean the outside of the unit may cause damage to the plastic or electrical components. This may result in water leaking outside the unit, equipment damage, release of noxious gases, or fire.
- Before cleaning the unit, switch it off and turn the breaker off. If this procedure is not followed, you may be injured as the fan inside rotates at high speeds during operation.
- Do not step on or place any object on the outdoor unit. You may be injured if you or the object falls.
- Use caution when touching the outdoor unit, as surfaces may become hot under direct sunlight.

Description of pictograms

Throughout this manual and on the device itself you will encounter various pictograms depicting hazards or other noteworthy items. Please consult the table below for their meanings:

	Dangerous high voltage is present. Do not access a compartment with this symbol.
	A pressurized liquid or gas is present. Do not puncture or heat up with a flame.
	The surface may be hot. Do not touch.
	A flammable chemical or gas is present. Do not use open flames around the device.

	Indicates the “Quilt User Manual” should be read before performing an operation.
	Indicates the “Quilt User Manual” should be considered when operating the device close to where the symbol is placed.
	Indicates the “Quilt Installation & Service Manual” should be read before performing an operation. A qualified professional should perform the operation.

Parts description

Quilt indoor unit & front cover

1 indoor unit

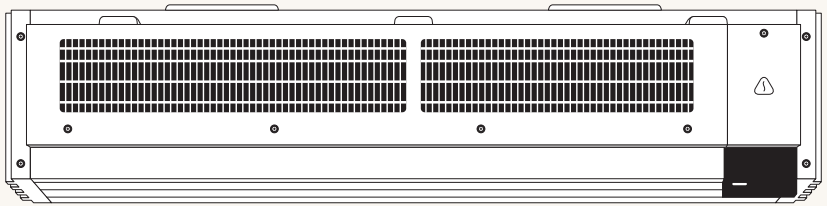

2 backplate

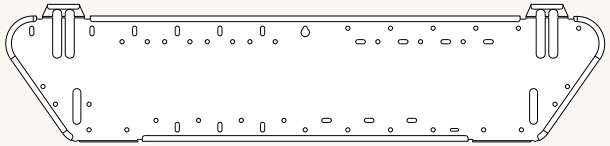

3 filter (2x)

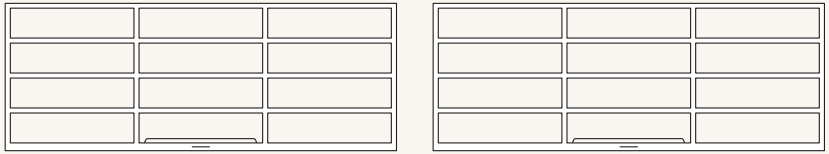

4 front cover

5 install template
manufactured after September 2025

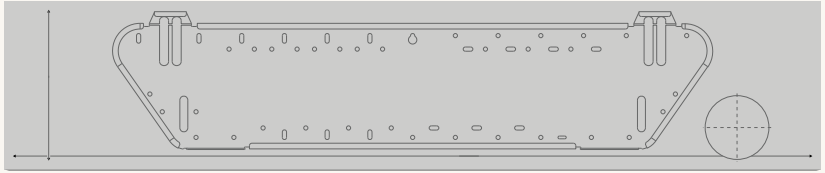

6 ¼” flare nut (1x)

7 ⅜” flare nut (1x)

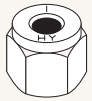

8 ¼” tamper-proof cap (1x)

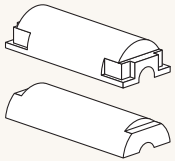

9 ⅜” tamper-proof cap (1x)

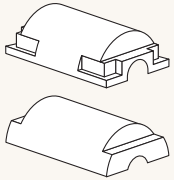

Quilt outdoor unit

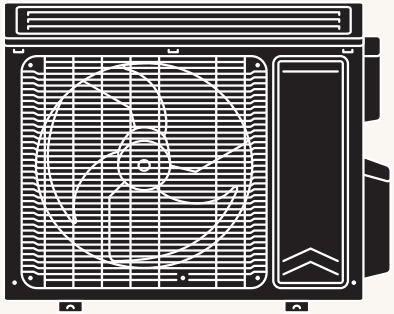

1 outdoor unit

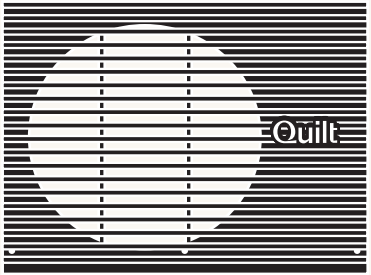

2 outdoor unit front panel

3 drain plugs (3x)

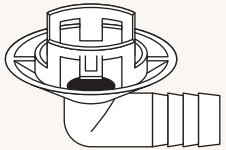

4 drain connector (1x)

5 shock-absorbing foot pads (4x)

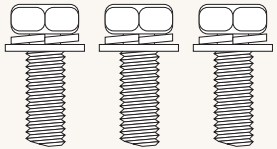

6 M6x16 bolts (3x)

Quilt Sense

1. Quilt Sense

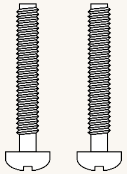

2. M3x25 mounting screws (2x)

Quilt Dial

1. Quilt Dial (with USB-C power cable attached) (1x)

2. power adapter (1x)

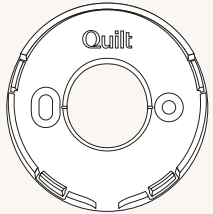

3. wall mount (1x)

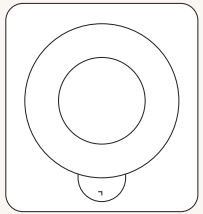

4. wall mount adhesive (1x)

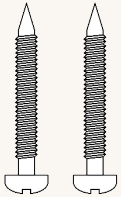

5. M4x30 wall screws (2x)

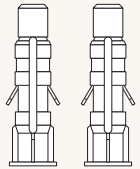

6. Ml4 drywall anchors (2x)

System overview

Heat pumps are more efficient than traditional HVAC systems because they move heat from one place to another, rather than generating heat. Your Quilt system contains a refrigerant system connected to heat exchangers in both the outdoor unit and indoor unit. When the system is operating, the compressor and control valves within the outdoor unit cycle the refrigerant between the indoor and outdoor heat exchangers to pull heat from one environment and pump it for release at the other.

In a heat pump system, the direction of heat movement is reversible, which equips the single system to heat or cool your indoor space. When the system is heating indoors, heat energy is absorbed in the outdoor environment and released indoors. When cooling, the system absorbs heat from indoors and releases it at the outdoor unit.

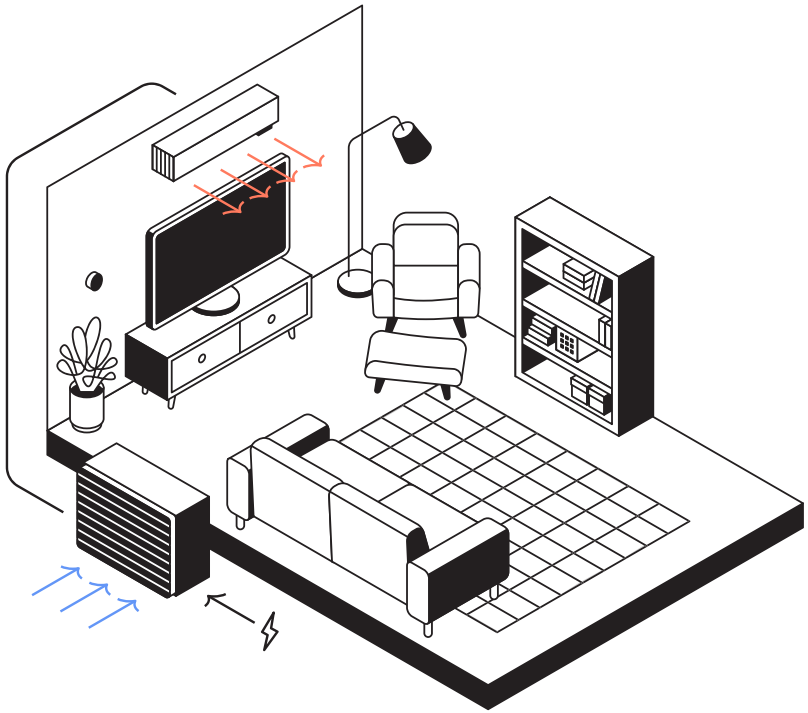

Indoor unit

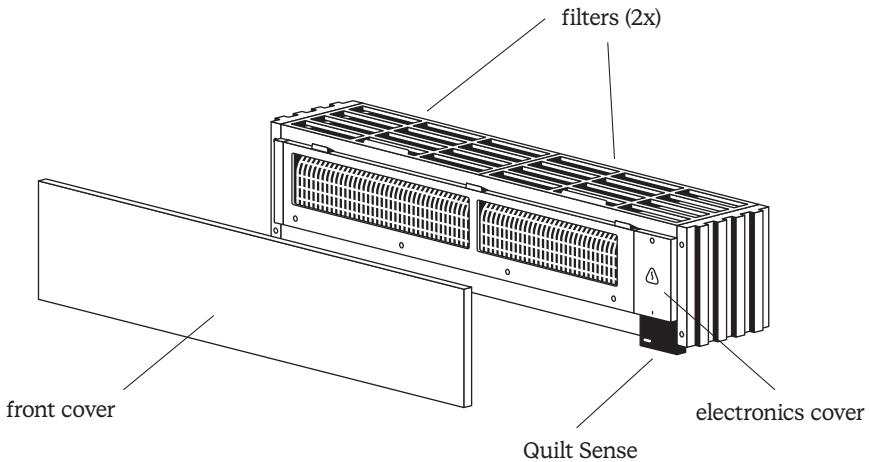

The indoor unit delivers heating or cooling to each space in the home

- The front cover is removable, swappable, and paintable, and wallpaperable
- Two air filters minimize dust and debris to the indoor unit.
- The electronics cover is removable for servicing.

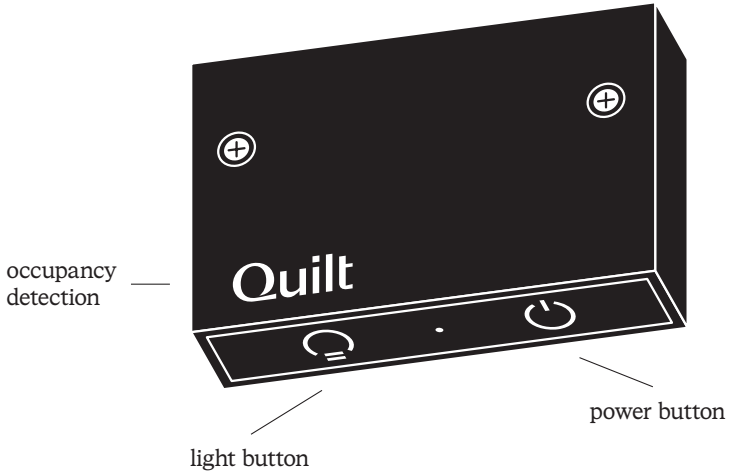

- The Quilt Sense contains control electronics and occupancy sensing.

Indoor unit

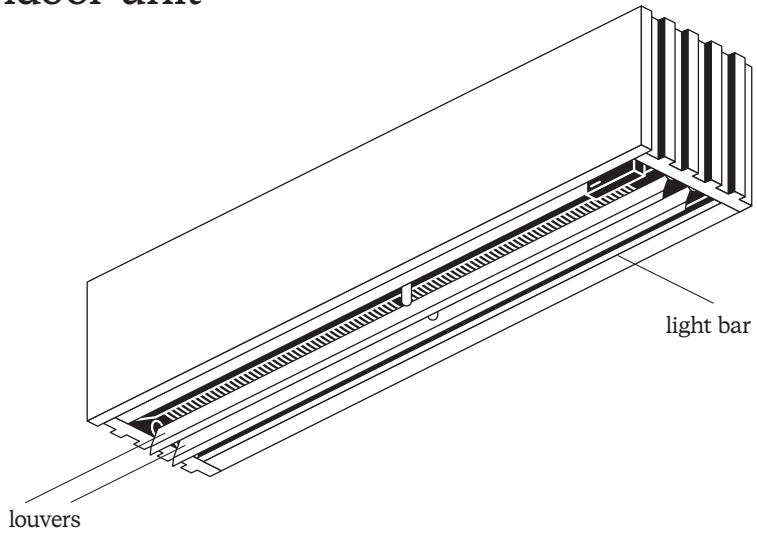

- The louvers direct the air coming out of the indoor unit.
- The light bar provides an accent light and displays the system status.

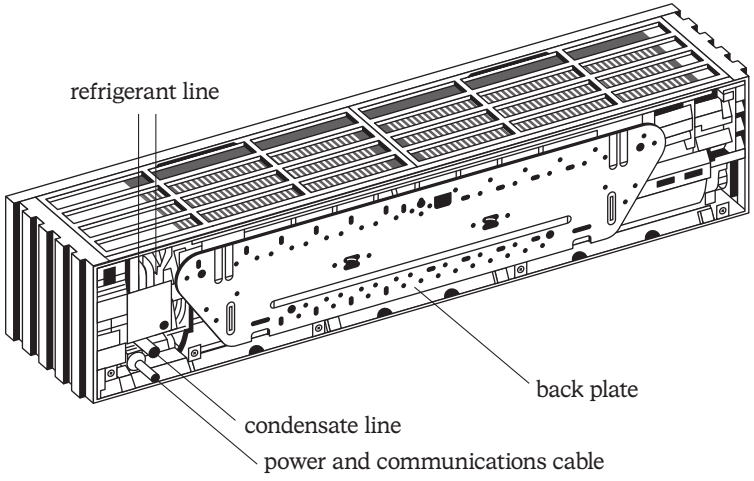

- The refrigerant lines transfer refrigerant to heat and cool the space.
- The condensation line drains condensation to the outside.
- The power and communications cable delivers power to the indoor unit and allows it to communicate with the outdoor unit.
- The back plate enables quick, easy, and secure wall mounting.

Outdoor unit

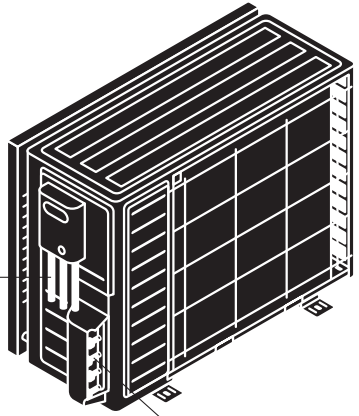

The outdoor unit delivers heating and cooling to up to two individual indoor units.

- The front panel covers the outdoor unit; it will be installed by a Quilt-certified technician.
- The outdoor unit distributes electricity to the indoor units.
- The refrigerant valves connect the refrigerant lines, allowing refrigerant to flow to each indoor unit.

Quilt Dial

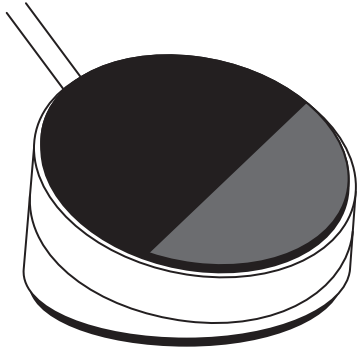

The Quilt Dial is a smart thermostat. It senses the room's temperature and sends that data to the Quilt heat pump system to create the perfect climate in the space. The Dial can also control your Quilt system via its touch panel display and rotary dial. The Dial communicates wirelessly with the Quilt system, so it can be mounted on a wall or set on a flat surface, like a table or countertop.

Please see *How to install the Quilt Dial* under *Parts installation* for tips on the best placement for your Dial.

Parts installation

Installation of the overall Quilt system should be installed by a Quilt-certified, licensed HVAC professional. Users can remove and reinstall the indoor unit's filters and the front cover for cleaning and customization. The Dial thermostat is configurable for tabletop and wall-mounted use. The Quilt Sense is removable, but should only be removed when instructed by Quilt for troubleshooting or replacement.

How to remove and install filters on the indoor unit

There are two air filters on the top of the indoor unit. They must be removed and cleaned regularly to ensure optimal performance of the Quilt system (see section on *Maintenance and cleaning*).

TO REMOVE THE FILTERS:

1. Position a step stool or ladder in front of the unit so that you can easily and safely reach the top of the indoor unit.
2. Grasp the lip on the filter with your fingers and pull. The filters are secured magnetically and should easily come off.

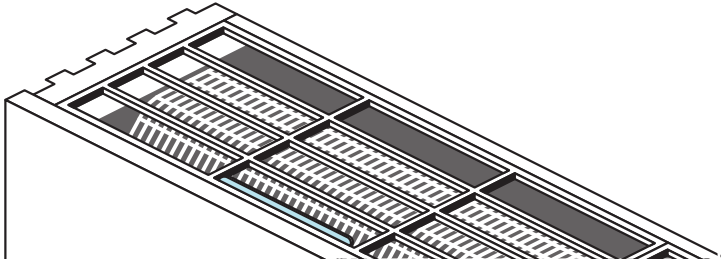

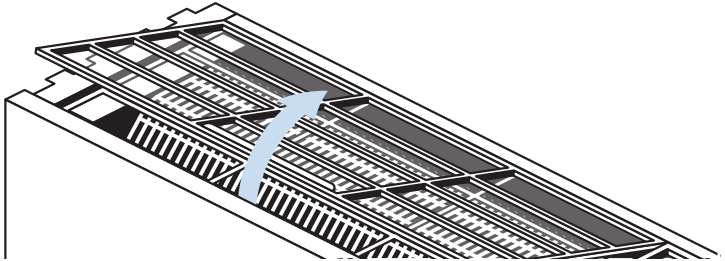

TO INSTALL THE FILTERS:

1. Position a step stool or ladder in front of the unit so that you can easily and safely reach the top of the indoor unit. Keep at least one hand on the stool to steady yourself while installing the filters. Do not allow children to perform this.
2. Place each filter on the top of the unit, one on the left side and one on the right. You may have trouble seeing the top of the unit, but try to align the filter with the installed positions shown in the diagram.
3. Push the filters in toward the wall until they magnetically snap into place and sit flush to the top of the unit. If a filter does not snap into place, there may be an alignment issue; shift the filter left and right until you feel the magnets pull them into place.

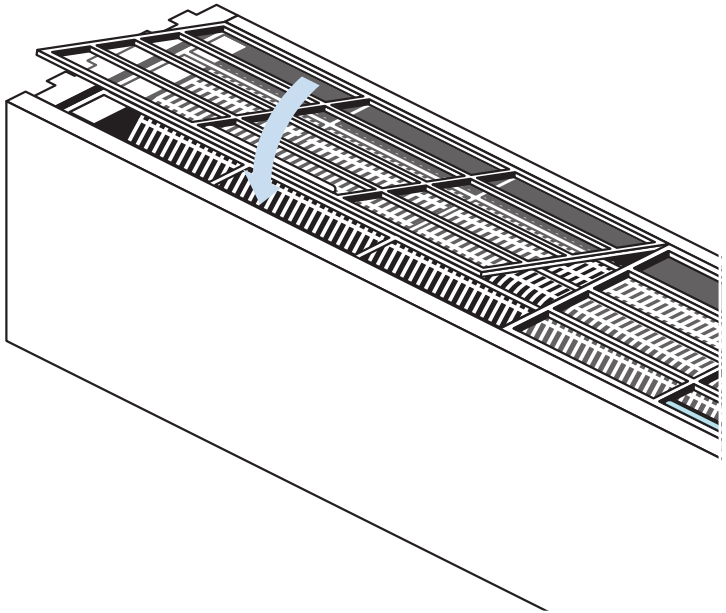

How to remove and install the front cover

TO REMOVE:

1. Position a step stool or ladder in front of the unit so that you can easily and safely reach the top of the indoor unit. Be careful to steady yourself while removing the front cover. Do not allow children to perform this.
2. Hold the front cover near the lower corners of the left and right edges, then pull away from the wall. This will disengage the magnets on the lower edge of the front cover.
3. Now lift the front cover upward. The front cover will detach from the indoor unit.

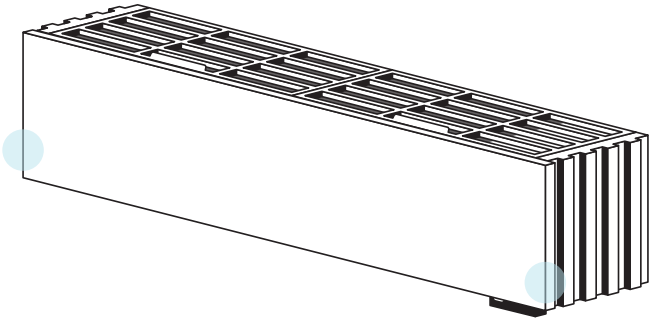

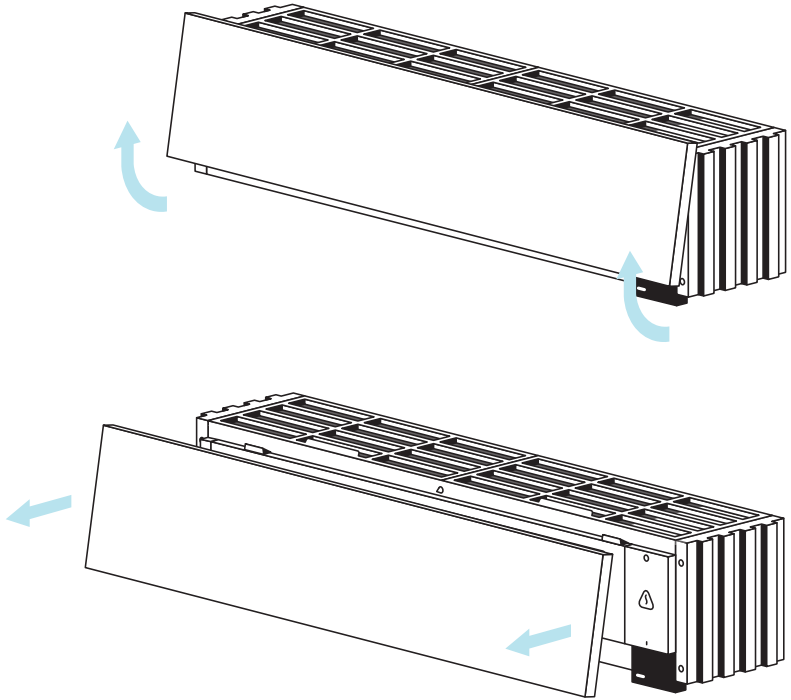

TO INSTALL:

1. Position a step stool or ladder in front of the unit so that you can easily and safely reach the top of the indoor unit. Keep at least one hand on the stool to steady yourself while installing the front cover. Do not allow children to perform front cover removal.
2. Hold the cover by the bottom edges, with the front of the cover facing you. In the correct orientation, the Quilt logo on the back of the cover should be positioned upright.
3. Align the left and right sides of the cover with the left and right sides of the indoor unit. Tilt the cover slightly forward, then position the top edge over the three tabs located on the unit.
4. Lower the front cover until you feel a slight pull; this indicates that the magnets are properly positioned and the cover is locked in place.
5. Check both left and right sides to confirm the front cover is flush with the front of the unit. The front cover should be lined up and parallel to the vertical pattern on the left and right sides of the indoor unit.

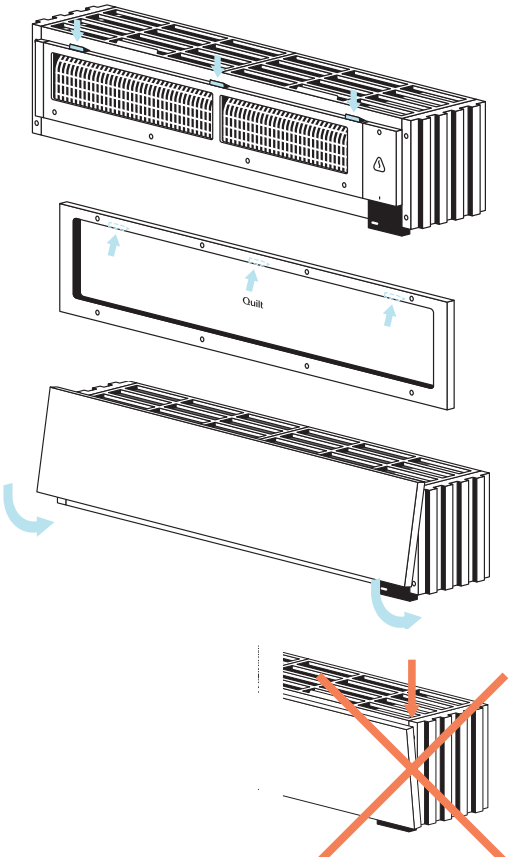

Tip: If the front cover is incorrectly installed, you may see it hanging loose from the unit at one of the upper corners. This indicates that the retention tabs were not fully engaged. Remove the front cover and try again.

Tip: You can paint or wallpaper your white front cover to make it completely your own. For design inspiration, follow Quilt on Instagram.

How to remove and install the Quilt Sense

The Quilt Sense is user-removable for upgrade and service. However, the Sense should only be removed when instructed by Quilt support for troubleshooting or replacement. Prior to installing or removing the Quilt Sense, the system should be powered off.

TOOLS:

- Step stool or ladder
- Phillips head screwdriver
- M3 screws (included)

TO REMOVE:

1. Position a step stool or ladder in front of the unit so that you can easily and safely reach the top of the Indoor Unit. Keep at least one hand on the stool to steady yourself. Do not allow children to perform this.
2. Remove the front cover of the indoor unit (see instruction on *How to remove and install the front cover* under *Parts installation*).
3. Use a Phillips head screwdriver to remove the two M3 screws holding the module in place (see illustration).
4. Once the screws are removed, lightly tug the Quilt Sense to detach it from the magnets holding it in place.

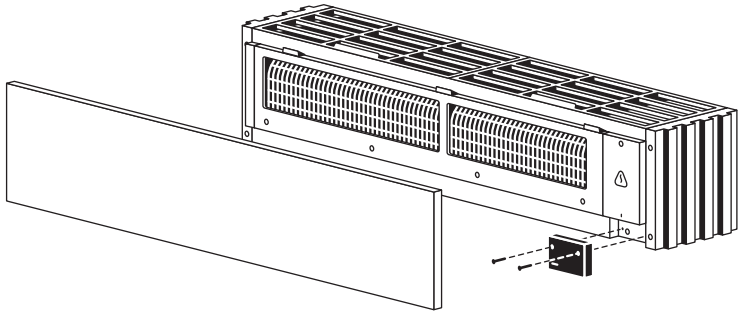

TO INSTALL:

1. Position a step stool or ladder in front of the unit so that you can easily and safely reach the top of the Indoor Unit. Keep at least one hand on the stool to steady yourself while installing the Quilt Sense. Do not allow children to perform this.
2. Remove the front cover of the Indoor Unit (see instruction on *How to remove and install the front cover* under *Parts installation*).
3. Insert the Quilt Sense into the indoor unit as shown, carefully aligning the connector. The module will sit flush once the magnet is aligned.
4. Install the two M3 screws provided with the Quilt Sense.
5. Use a Phillips head screwdriver to tighten the two M3 screws.
6. Replace the front cover of the indoor unit (see instruction on *How to remove and install the front cover* under *Parts installation*).

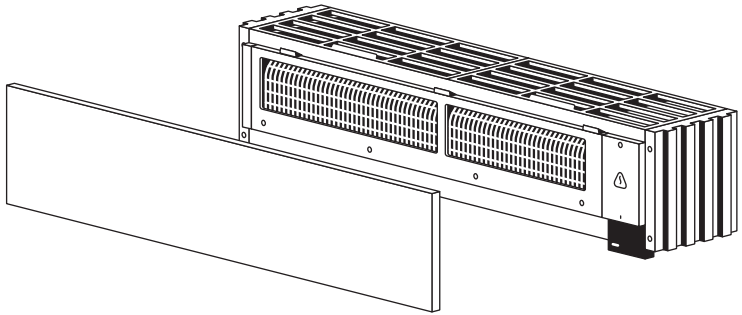

How to install the Quilt Dial

Note: The Quilt Dial should be installed after the indoor unit(s), outdoor unit(s) and Quilt Sense module(s) have been installed and tested for heating and cooling operation.

Refer to the *Installation and Service Manual* for all detailed installation and ownership information, including the installation procedure for in-wall wiring. Quilt recommends that in-wall wiring be done by a licensed professional.

Placing the Dial

There are two placement options for the Dial:

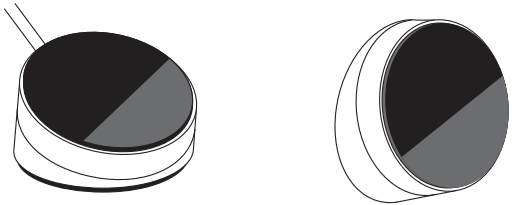

The Dial works out-of-the-box as a tabletop device with the included adapter and cable. It can also be converted for wall mounting.

The Dial is both a controller for your Quilt system and a temperature sensor. It should be installed in the same room as the indoor unit it will be paired with in a location that accurately represents the temperature of the room.

Places to **avoid** installing the dial:

- Near heat sources, including fire places, space heaters, appliances, and other electronics, like routers
- In direct sunlight
- On exterior-facing walls of the home
- Next to windows susceptible to drafts
- In the airflow path of the indoor unit
- Directly below the indoor unit

Powering the Dial

The Dial can be powered using the in-box power cable and provided power adapter. To use the provided power cable and power adapter, plug the USB-C connector into the port on the power adapter and plug into the wall.

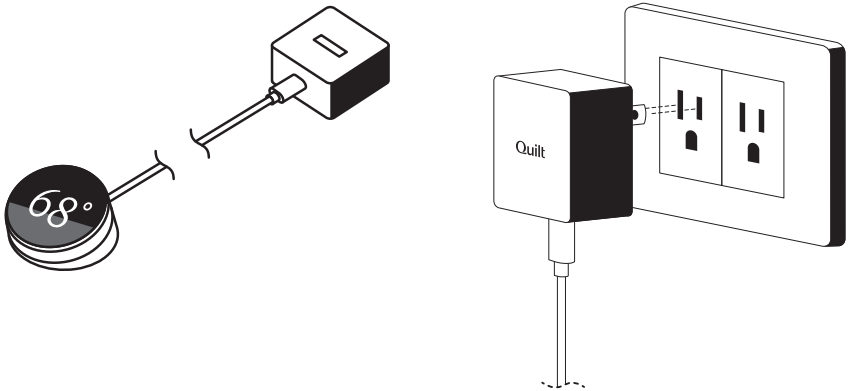

Alternatively, the Dial can be configured for professional wall mount installation using a suitable 5-15V DC power adapter and in-wall rated wiring of 18-22 AWG (not provided). In this case, the original power cord must be detached. Please see the *Installation and Service Manual* for the full procedure.

Wall mounting the Dial

TOOLS

- Screw driver
- Drill & drill bit
- Tape
- Level
- Pencil
- Wall mounting bracket (provided)
- Screws (provided)
- Adhesive (provided)

PREPARE THE WALL MOUNTING LOCATION:

1. Before mounting the wall mount bracket, find a suitable location on the wall for the Dial.

> **Tip:** Look for a location where the temperature is most representative of the ambient room temperature and has no hazards within the wall.

2. Decide how you will mount the wall bracket to the wall:
   - Install A: Screws with wall anchors (recommended)
   - Install B: Adhesive (provided in-box. Adhesive should only be used for painted drywall, glass, and metal.)
3. Using a level, pencil a small horizontal line on the wall where you intend to place the Dial. We recommend mounting the Dial anywhere from 3 to 5 feet from the floor.

> **Tip:** If installing near a light switch, center the Dial with the light switch, and place it about 1.5-2.5 inches away from the switch for a cohesive look.

Follow the instructions below on the following pages based on your chosen wall mounting:

- **Install A:** Screw-mount to wall with pre-installed in-wall wiring
- **Install B:** Adhesive-mount to wall with the provided power cable

INSTALL A: SCREW-MOUNT TO WALL WITH PRE-INSTALLED IN-WALL WIRING

4. At the center of your horizontal pencil line, using a ½ in. drill bit, drill a hole into the hollow of the wall.
5. If you are not installing directly into a stud, line up the wall mount to the horizontal line, and mark the screw locations using the provided wall mount. Use a ⅛ in. drill bit to drill pilot holes at the marked locations. Now push the drywall anchors into the holes.
6. Using suitable in-wall wiring, fish the power wire from your intended power source location and through the ½ in. hole you drilled. Fasten the wires with tape to prevent them from falling back into the wall.
7. Pull the wires through the large center hole in the Dial wall mount, so that the flat side of the wall mount is positioned against the wall.
8. Use the horizontal line indicators on the wall mount to align it to your horizontal pencil line; mark the locations of the screw holes on your wall. Ensure that the Quilt logo is right side up.

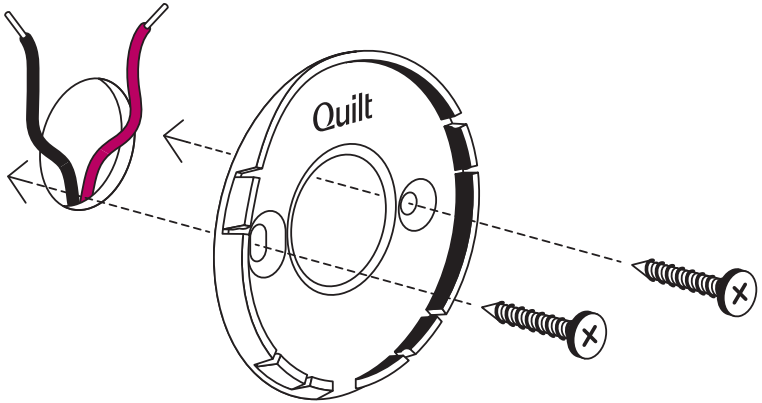

9. Using the provided screws, fasten the wall mount bracket to the wall. Be careful not to overtighten.

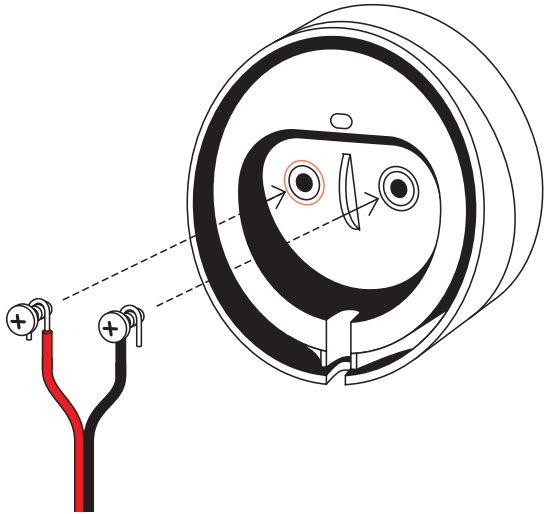

10. Note which wire is (+) positive and which is (-) negative. Then fasten the (+) positive wires to the (+) positive screw terminals on the bottom side of the Dial, and the (-) negative wire to the (-) negative screw terminal. Make, sure that the (+) positive (red) and - negative (black) are aligned, or the Dial will not turn on. Tighten the screws to hold the wires. Ensure that the wires are not touching each other.

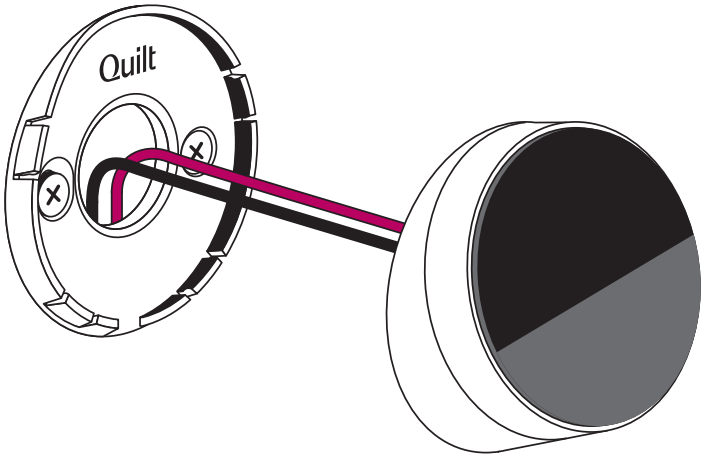

11. To secure the Dial in the mount, remove the back rubber cover from the Dial. Hold the Dial so that it is angled up toward you. Align the back of the Dial to the wall mount and push the Dial into the mount. Push until the Dial is fully seated with a click.
12. Once the Dial is fully mounted, connect the other ends of your in-wall wiring to an appropriate, technician-approved power adapter.
13. Power on the Dial by plugging the adapter into an outlet or turning on the breaker.

INSTALL B: ADHESIVE MOUNT WITH INBOX POWER CABLE

4. Ensure that the provided power cable is attached and snapped into the cord retainer.
5. Use the horizontal line indicators on the wall mount to align it to your horizontal pencil line; mark the locations of the screw holes on your wall. Ensure that the Quilt logo is right side up.
6. Remove the rectangular circular back film from the adhesive. Holding the large rectangular backing film, place the adhesive onto the wall mount bracket, ensuring that the center hole is clear of adhesive. Press firmly for twenty seconds to set.

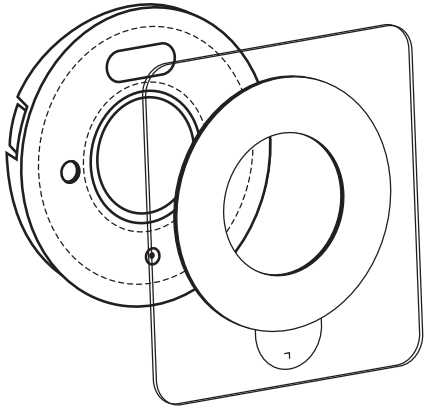

7. Remove the rectangular backing film on the wall side of the adhesive.
8. Align the wall mount to the wall using the horizontal line indicators on the wall mount bracket against the pencil mark on the wall. When aligned, press the mount firmly against the wall for twenty seconds to set.
9. To attach the Dial to the mount, position the power cord hanging down, so that the Dial is angled up to you. Align the back of the Dial to the wall mount and push the Dial into the mount. Push until the Dial is fully seated with a click. Do not remove the dial for three days after install to allow the adhesive to fully cure.

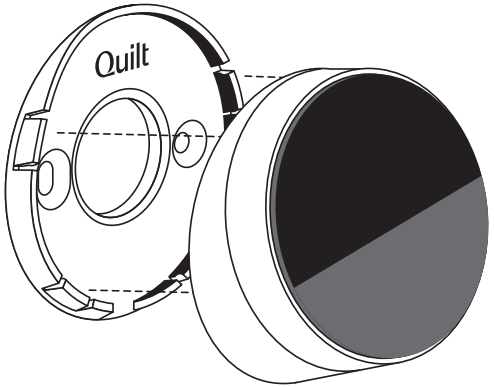

9. Power on the Dial by plugging the adapter into an outlet or turning on the breaker.

How to install supplemental temperature sensors

Note: The sensor should be installed after the indoor unit(s), outdoor unit(s) and Quilt Sense module(s) have been installed. The sensor can be installed before or after a Quilt Dial in the same room. The sensor should be installed *after* it is paired, as pairing requires removal of the battery cover plate on the back of the sensor. See *Pairing a supplemental temperature sensor to a room* in the next section for details on pairing the sensor to a space.

APPROVED SENSORS

Approved supplemental sensors currently include the SwitchBot Indoor/ Outdoor Thermo-Hygrometer

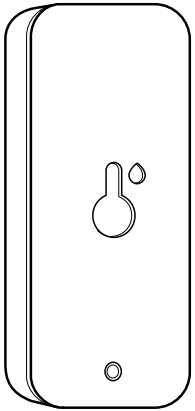

POWERING THE SENSOR

The supplemental sensors are battery powered. They require two AAA alkaline batteries. Once batteries are installed, the sensor will be available to pair to your Quilt system.

PLACING THE SENSOR

Each sensor includes a small, rectangular, white adhesive strip that may be used to secure the device to its preferred installation location, whether table-top or wall mounted, as well as a lanyard that may also be used to affix the device to a preferred installation location.

The sensor provides supplemental temperature sensing for your Quilt system. It should be installed in the same room as the indoor unit it will be paired with in a location that accurately represents the temperature of the room.

IMPORTANT: Avoid placing sensors in a location that could cause inaccurate temperature readings such as

- Near heat sources including fire places, space heaters, appliances, and other electronics like routers
- In direct sunlight
- On exterior-facing walls of the home
- Next to windows susceptible to drafts
- In the airflow path of the indoor unit
- Directly below the indoor unit

Download the Quilt mobile app

ANDROID

iOS

Setup and pairing

Adding the indoor unit to the Quilt app

1. Make sure the heat pump system is turned on (see on *How to power the heat pump system* in the next section).
2. Open the Quilt app on your smartphone and login.
3. Once logged in, create your home if you have not done so already.
4. Create the room to which you want to link to the indoor unit.
5. Select the “+” button and then select “Add a device” from the app menu.
6. From there, the app will guide you through adding the unit to your room.

For the latest pairing instructions go to quilt.com/support/pairing

Adding the Dial

1. Before adding the Dial to the Quilt app, ensure your home and the room to which you want to add the Dial are set up in the app. If you have not yet created a home and/or the room in the app, do that first.
2. Now make sure the Dial is powered on (see section on *How to install the Quilt Dial* under *Parts installation*).
3. When the Dial is ready to be added, the display will show a QR code to scan.
4. In the Quilt app, choose the room to which you want to add the Dial, and select “Add a device.”
5. Follow the instructions to complete pairing.

Follow additional instructions and for the latest pairing instructions go to quilt.com/support/pairing

Pairing a supplemental temperature sensor to a room

1. Before adding a sensor in the Quilt app, ensure your home and the room to which you want to add the sensor are set up in the app. If you have not yet created a home and/or the room in the app, do that first.
2. Now make sure the sensor's batteries are installed.
3. In the Quilt app, choose the room you want to add the sensor to and, under Room Settings, select “Add sensor.”
4. Follow the instructions in the app to complete pairing.
5. Once the sensor has been successfully paired to a room, place the sensor in a location in the room that adheres to the instructions in “How to install supplemental temperature sensors” in the previous section.

Setting up Auto-Away

The Quilt Sense detects room occupancy to help the system perform as efficiently as possible. When rooms are empty, the system will switch to Away Mode (see *Using your Quilt* in the next section) to save energy. The occupancy system has a maximum field-of-view of 162 degrees with a range of up to 15 feet. You can turn Aut-Away on and off in the app.

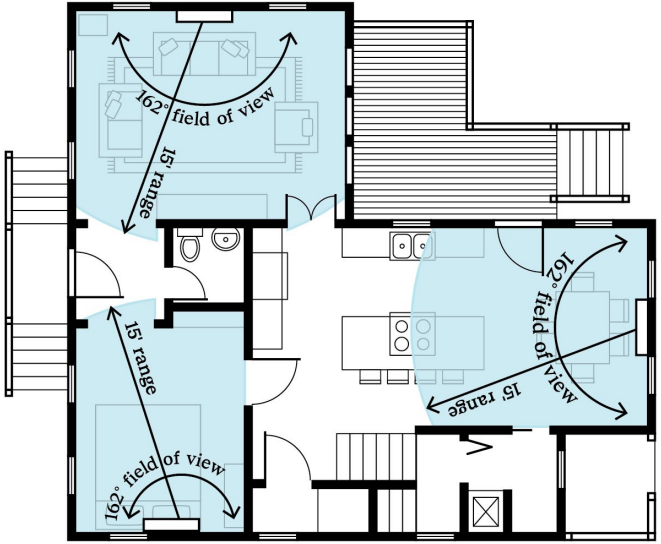

Operations

How to power the heat pump system

Power to the Quilt System is routed from your home circuit breaker panel to the outdoor unit. Each outdoor unit will be paired with its own circuit breaker. For some installations, there is also an AC service disconnect switch mounted next to the outdoor unit. Consult your professional installer or electrician for guidance on the location of each circuit breaker and AC service disconnect. When powering the unit system on and off, do not remove any protective covers on the units.

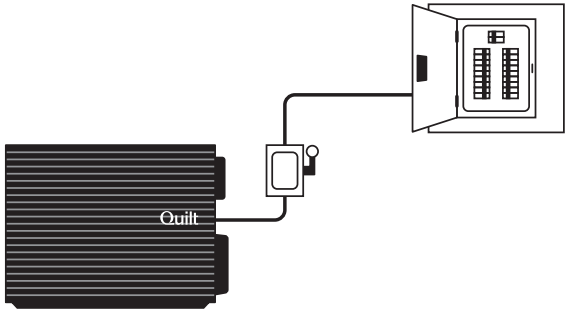

TO POWER ON THE SYSTEM:

1. Locate the circuit breaker panel for the specific outdoor unit.
2. Flip the circuit breaker for the specific outdoor unit to the “On” state. The outdoor units should be labeled on the panel.
3. If there is an AC service disconnect, ensure that it is in the “On” state.

TO POWER OFF THE SYSTEM:

1. Locate circuit breaker panel for the specific outdoor unit.
2. Flip the circuit breaker for the specific outdoor unit to the “Off” state. The outdoor unit should be labeled on the panel.
3. For systems that are connected to an AC service disconnect, put the disconnect in an “Off” state.
4. The system should now be off and non-functioning.

Using your Quilt

Once the system is properly installed, and the app set up, the system is ready to use with the Quilt app or Dial.

The app and the Dial allow you to control multiple components of your Quilt system, including target temperatures, heating, cooling, fan, and the light bar. The app also allows you to set custom schedules and enable or disable Auto-Away for individual rooms and on a whole-home level. You can customize these features to your individual preferences.

The basics

The Quilt system is designed for room-by-room control. Every area with one or more indoor units will be designated as a “room” in your home. You can control each room individually or on a whole-home level. Each Dial also gives you control over every room in your home.

CONTROLS	DESCRIPTION
Heating	Heats your space to the temperature you set. The system will not cool even if the temperature of the room goes above your target temperature.
Cooling	Cools your space to the temperature you set. The system will not heat even if the temperature of the space goes below your target temperature.
Heat / Cool	Maintains the temperature of a space within a comfortable temperature range.
Fan	Runs the fan to circulate the air in the space, without heating or cooling. You can adjust the fan speed and direction of airflow on the Dial or app.

CONTROLS	DESCRIPTION
Away	Intended for unoccupied spaces, Away Mode maintains a temperature within an energy-efficient temperature range. The default temperature range is 65˚F to 78˚F, which can be customized using the app. **Note:** If customized, the range between the upper and lower temperatures in Away must be a minimum of 8˚F (4.5*C) apart.
Off	Disables room conditioning and fan operation, except Safety Heating (see below). The light bar can still be used when the unit is set to **Off.** **Note:** As long as the home’s electricity is running. **Safety Heating** will activate even if the indoor unit is turned off. **Safety Heating** engages if the measured indoor temperature falls below 46˚F (8˚C). Safety Heating prevents the unwanted consequences of freezing temperatures in the home, such as pipes bursting. Off can be scheduled with the app or the Dial.

Manually controlling your Quilt system

The modes described on previous pages can be selected in the Quilt app or Quilt Dial. If the system is not behaving as expected, and troubleshooting (see *Troubleshooting* section) does not resolve the issue, or the app and Dial are not otherwise accessible, you can enter **Safe Mode**. In **Safe Mode**, the system will maintain a temperature between 68°F (20°C) and 77°F (25°C).

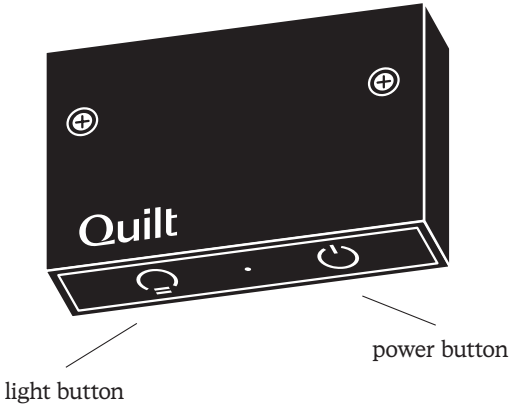

To start **Safe Mode**, press the **power button** (see the figure above) on the Quilt Sense to turn the indoor unit off (if the louvers are closed, the unit is already off). Press the **power button again** to turn on **Safe Mode**. Subsequent power button presses will toggle between **off** and **Safe Mode**. Exit Safe Mode via the app or Dial to resume normal operations.

If a room is offline

If the Quilt app or Dial is showing that a room is offline, it means that one or more Quilt devices has lost network connectivity. If no action is taken, the indoor unit will continue operating as it is currently. For example, if the unit was set to cooling to 68°F (20°C), whether via schedule or manual selection, the unit would continue cooling to 68°F, even if the Quilt system has lost network connectivity. The unit can also operate in **Safe Mode** (see previous page) when offline.

Restarting an indoor unit or Dial can bring the device back online.

Full features will return once the devices have reconnected to the network.

Light bar

The indoor unit comes with a light bar. You can turn the light bar on and off and control the colors and brightness of the light bar in the app and Dial. Pressing the **light button** on the Quilt Sense will also turn the light bar on the indoor unit on and off.

How to restart the Dial

If the Dial is not performing as expected, you can restart the Dial from the display. If the display is frozen or otherwise unresponsive, unplug the adapter and plug it back in to restart it. If the power source is inaccessible, you can manually turn the Dial on and off by pressing the reset button.

- To access the reset button:
  - **Tabletop Dials:** Turn the Dial over and remove the rubber cover.

  - **Wall-mounted Dials:** To remove the Dial from the wall mount, wrap your hand around its base, then firmly pull it away from the wall See video on quilt.com/support for demonstration of removal.

How to restart the Dial cont.

- Maintain power connection to the Dial, do not disconnect the power cable or power adapter.
- Press the button highlighted in teal using a sharp pointy tool, like a toothpick.

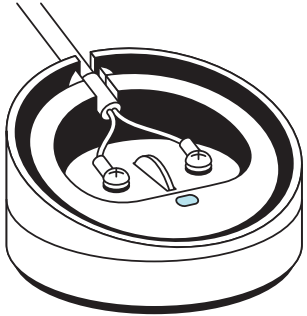

- The Dial should power off and on.
- The Dial is ready to be used as normal.

How to factory reset the Dial

If powering off and on does not fix the issue, you can perform a factory reset. You will have to add your device to the app again after a factory reset. To factory reset the Dial, swipe to the “settings” screen and then click “factory reset.” Acknowledge and the factory reset will start.

If you are not able to factory reset using the Dial interface then the device can be manually reset by pressing the button as described above for at least 5 seconds.

How to restart the Quilt Sense

If the indoor unit is not performing as expected (for example, you cannot control the louvers) try restarting the Quilt Sense by pressing and holding the **power button** for 8s.

How to factory reset the Quilt Sense

If a simple restart does not fix the issue, or if you have to reconnect your device to a different Wi-Fi network, you can perform a factory reset. Hold down the **light button** and **power button** simultaneously for 3 seconds. Note: this means you will have to add your device in the Quilt app afterwards.

Maintenance and cleaning

For routine checks, Quilt recommends the following cleaning schedule. Detailed cleaning instructions are in the following sections.

ONCE A MONTH

- Inspect the outdoor unit for debris or dirt build up around the grate.
- Inspect the indoor units for debris or build up around the filters.

ONCE EVERY THREE MONTHS OR AS NEEDED

- Clean the indoor unit filters

ONCE EVERY SIX MONTHS OR AS NEEDED

- Inspect the lineset and wires coming out of the outdoor unit for damage. Contact a Quilt-certified service technician if there is damage.
- Clean and remove any dust and brush from around the outdoor unit.
- Clean the outside of the indoor unit.

ONCE EVERY YEAR

- Contact support@quilt.com or call 650-423-1111 to conduct yearly maintenance and inspection.

How to clean the indoor unit filters

1. Turn off the heat pump system (see *How to power the heat pump system* under *Operations*).
2. Follow the procedure in the installation section to remove the filters (see *How to remove and install filters on the indoor unit* under *Parts installation*).
3. Take the filters to the sink and shake out any loose dirt.
4. Rinse the filters down with warm water to loosen debris. If necessary, gently scrub using a sponge or soft brush and soapy water. Any common dish detergent will work.
5. Allow the filters to air dry completely before replacing.

How to clean the outside of the indoor unit and front cover

1. Turn off the heat pump system (see *How to power the heat pump system* under *Operations)*.
2. Apply mild soap and water to clean microfiber. If the veneer is wood or painted, use the appropriate cleaner for that material.
3. Wipe the front cover down with the soapy cloth to remove dust and dirt.

Be sure to avoid knocking the front cover loose during cleaning. If preferred, you may clean the front cover after removing it from the unit (see *How to remove and install the front cover* under *Parts installation*).

4. Wipe the front cover dry with a clean cloth.
5. Wipe the rest of the unit down with the soapy cloth to remove dust and dirt.
6. Wipe the rest of the unit dry with a clean cloth.
7. Similarly, your Quilt Sense can be cleaned with mild soap and water on a clean microfiber cloth.

How to clean the outdoor unit

1. Turn off the heat pump system (see *How to power the heat pump system* under *Operations*).
2. Using a garden hose, gently spray the outside of the unit and blower fans. Use a soft brush to wipe away dirt and grime. **Caution:** a high-pressure spray may damage the fins and reduce performance.
3. While wearing a pair of protective work gloves, remove visible debris from around the unit. Please note the heat exchanger is extremely sharp. Do not attempt to clean around the heat exchanger. Contact support@quilt.com or call 650-423-1111 to clean inside the unit.

How to clean the Dial

Caution: Do not spray the Dial directly with water or use cleaning solutions or polishes, as doing so may damage the product.

1. Lightly dampen a soft, clean cloth with water.
2. Wring out any excess water from the cloth.
3. Gently wipe the display and sides of the Dial, ensuring that no drops of water accumulate around the product.
4. Use a damp cloth to clean dust off the rubber bottom of the Dial.

Troubleshooting

If you are having trouble with the Quilt system, there are a few common symptoms and solutions that can help get your devices back up and running. Please see quilt.com/support for more information.

SYMPTOMS	CHECKS
The indoor unit is not running or is not responding	1. Confirm the indoor unit is powered on by turning on the light bar via the Quilt app or Dial. If it doesn't turn on, do the following: a. Confirm that the AC service disconnect to the outdoor unit is plugged in and on. b. Confirm that the circuit breakers are not flipped off for both the outdoor unit and indoor unit.
	Confirm the home Wi-Fi network is functioning. If it is not, refer to the section *Manually controlling your Quilt system* under *Operations*.
	Confirm there is not a mode conflict, where one unit is set to heat and another unit connected to the same outdoor unit is set to cool. Test for mode conflict by changing the mode on both indoor units: 1. Confirm via heating mode: Change both indoor units to "heat" and adjust the setpoint temperature to the maximum value. Warm air should start blowing within 5 minutes. 2. Confirm via cooling mode: Change both indoor units to "cool" and adjust the setpoint temperature to the minimum value. Cold air should start blowing within 5 minutes.

SYMPTOMS	CHECKS
	Restart the Quilt Sense by pressing and holding the power button for 8 seconds.
	If you are still experiencing issues, review additional troubleshooting guides on quilt.com/support or contact a Quilt-certified service professional.
Cooling/heating is abnormal	Inspect the outdoor unit for branches or debris. If found, remove.
	Inspect the indoor unit air filters, and clean if necessary. See *Maintenance and cleaning* section for detailed instructions.
	If airflow is low in cooling mode, remove the indoor unit front cover and inspect the heat exchanger for frost-formation. If frost is found, or if the airflow issues persist, contact support@quilt.com or call 650-423-1111 to troubleshoot further.
The louvers on the indoor unit do not close completely when in Off mode	Power off the indoor unit by turning off the AC service disconnect switch of the outdoor unit, or by flipping the circuit breakers to the outdoor unit off. Turn the system back on (see *How to power the heat pump system* under *Operations* more details). If you are still experiencing issues, contact a Quilt-certified service professional.

SYMPTOMS	CHECKS
Indoor system is producing abnormal sounds	Check that the filters on top of the indoor unit are flush with the top of the indoor unit. Check that the filters are clean and that there is no debris. See *Maintenance and cleaning* for instructions to clean the filters.
	Do the sounds only occur when transitioning between modes? These sounds may be due to the expansion or contraction of the indoor unit as temperature changes. While not a functional issue, contact a Quilt-certified service professional if the noises are particularly loud, persistent, or concerning.
	Do the sounds only occur when the louvers are moving? If yes, then contact a Quilt-certified service professional.
Dial is offline or unresponsive	If the Dial screen is off, check that it is plugged in.
	Refer to and follow the steps in *How to restart the Dial* under *Operations*.
	If you are still experiencing issues, review additional troubleshooting guides at quilt.com/support or contact a Quilt-certified service professional.
Dial is slipping on a table-top surface	Dust build-up can cause the rubber bottom of the Dial to be slippery. Clean the bottom of the Dial with a damp cloth.

Specifications

System performance

Quilt's heat pump system is an AHRI Certified ® product that meets the AHRI 210/240 standard for heat pumps.

Quilt's heat pump system meets Energy Star's energy efficiency requirements, including Energy Star Cold Climate and Energy Star Most Efficient 2025.

The Quilt system meets the efficiency requirements of California Energy Commission Title 20 and Title 24.

PERFORMANCE:

Energy Ratings	SEER2 25	HSPF2 12	CEE TIER 2

Indoor Unit Rated Capacity (BTU/h)	HEATING @ 47° F 9,000	COOLING @ 95° F 8,000
Two-Zone Outdoor Unit Rated Capacity (BTU/h)	HEATING @ 47° F 18,000	COOLING @ 95° F 16,000

Additional safety certifications

HEAT PUMP	DIAL
UL/CSA 60335-1 & UL/CSA 60335-2-40	UL 60730-1 & UL 60730-2-9

System specs

PROPERTY	INDOOR UNIT	OUTDOOR UNIT
Mass	11 kg	50 kg
Input voltage	Powered from ODU	208/230 VAC
Input voltage range		180 - 265 VAC
Input current	0.8 A	11.6 A
Number of phases	1	1
Frequency	50/60 Hz	50/60 Hz
Circuit breaker size	N/A - Powered from the outdoor unit	20A recommended, 25A maximum

PROPERTY	INDOOR UNIT	OUTDOOR UNIT
Recommended wire size (Indoor - Outdoor)	14 AWG	12 AWG
Operating temperature	32 to 104°F (0 to 40°C)	-15 to 128°F (-26 to 53°C)
Cooling operating range		41°F to 128°F
Heating operating range		-15°F to 86°F
Operating Altitude	Up to 6500 ft (2000 m)	Up to 6500 ft (2000 m)
Gas pipe OD	3/8”	
Liquid pipe OD	1/4”	
Minimum lineset length	3.5 m (11.4 ft) Per Indoor Unit	
Maximum lineset length	30 m (98 ft) Per Indoor Unit	50 m (164 ft) Cumulative
Maximum height difference	5 m (16 ft) OR 10 m (32 ft) with Oil Trap	

PROPERTY	INDOOR UNIT	OUTDOOR UNIT
Refrigerant type		R32
Refrigerant charge		3.2 lbs (15 m line set) Additional 9 g/m above 15 m
Sound pressure level	27 dBA - 48 dBA	50dBA* *At rated conditions
Max airflow	353 CFM	1882 CFM
Compressor type		Hermetic Rotary DC Inverter Compressor
Compressor model		EKPN150D30UFZR
Compressor oil		ESTER OIL VG75R · 450 ml
Max number of connected indoor units		2
Min number of connected indoor units		1

*at rated conditions in accordance with AHRI Standard 210/240

1. Cooling: Outdoor: DB/WB 95/75 & Indoor: DB/WB 80/67
2. Heating: Outdoor: DB/WB 47/43 & Indoor: DB/WB 70/60
3. Measured with +/- 3dBA margins

CAPACITY

PROPERTY	INDOOR UNIT	OUTDOOR UNIT
Rated Capacity - Heating @ 47 F	9,000 BTU/hr	18,000 BTU/hr
Minimum Capacity - Heating @ 47 F	2,500 BTU/hr (3,000 BTU/hr when single IDU is on)	2,500 BTU/hr (3,000 BTU/hr when single IDU is on)
Maximum Capacity - Heating @ 47 F	10,250 BTU/hr	20,500 BTU/hr
Rated Capacity - Cooling @ 95 F	8,000 BTU/hr	16,000 BTU/hr
Minimum Capacity - Cooling @ 95 F	2,000 BTU/hr	2,000 BTU/hr
Maximum Capacity - Cooling @ 95 F	9,850 BTU/hr	19,700 BTU/hr
Rated Capacity - Heating @ 5 F	9,000 BTU/hr	18,000 BTU/hr
Rated Capacity - Heating @ -5 F	9,000 BTU/hr	18,000 BTU/hr
Rated Capacity - Heating @ -13 F	8,000 BTU/hr	16,000 BTU/hr

PROPERTY	DIAL	SENSE MODULE
Input Voltage	5-15 VDC	12 VDC (from IDU)
Included Sensors	Temperature, Accelerometer, Ambient Light, Presence	Temperature, Accelerometer, Ambient Light, Presence, IR Receiver
Display	326 ppi AMOLED Touchscreen	N/A
Connectivity	2.4 Ghz & 5 Ghz Wi-Fi BLE 5.2, Thread	2.4 Ghz & 5 Ghz Wi-Fi BLE 5.2, Thread

Dimensions and clearances

Indoor unit

For optimal performance, we recommend installing the unit with 4 inches of space from the ceiling. However, the indoor unit is designed to perform well with as little as 3 inches of clearance from the top. For more details on the system performance by clearance, see quilt.com/support

OVERALL DIMENSIONS**	
A Width	38 ¼ in
B Height	7 ⅞ in
C Depth	8 3⁄16 in
Weight	24 ½ lbs

RECOMMENDED UNIT CLEARANCES	
D From Ceiling	4 in
E Below unit	18 in
F From floor	6 ft
G Sides	6 in

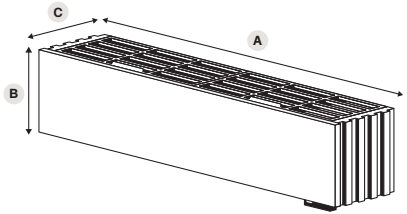

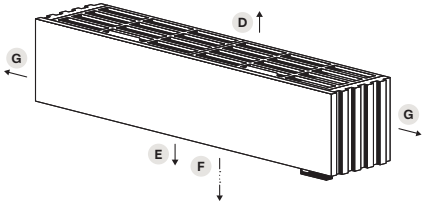

*Can detect presence within 15ft
** Visual dimensions of the Indoor Unit features extend past this envelope

Quilts Sense

A	11/16 in
B	3 5/16 in
C	13/16 in

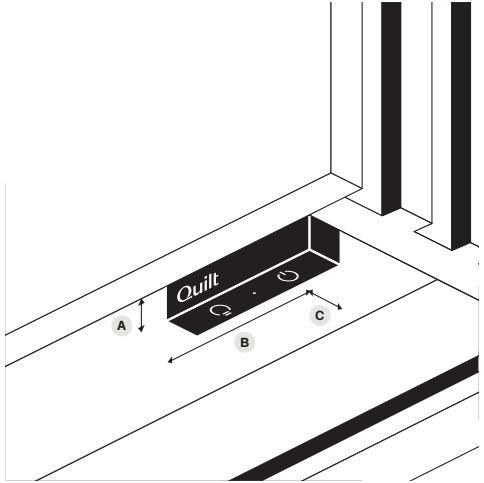

Outdoor unit

OVERALL DIMENSIONS*		
A	Width	35 1/16 in
B	Height	26 9/16 in
C	Depth	15 13/16 in
	Weight	110 1/4 lbs

RECOMMENDED UNIT CLEARANCES		
D	Above	12 in
E	Front	20 in
F	Back	4 in
G	Left Side	4 in
H	Right Side	14 in**

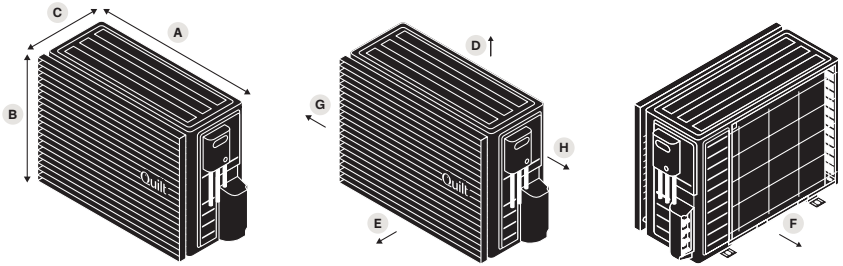

*Visual dimensions of the Outdoor Unit. Small features extend past this envelope.
**Minimum 10 in clearance required
The information provided in this document is current as of January 2025.

Dial

OVERALL DIMENSIONS

A Diameter	2 3/10 in
B Depth	1 1/4 in

RECOMMENDED UNIT CLEARANCES WHEN WALL MOUNTED

C From Floor	4 ft

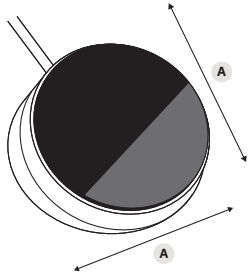

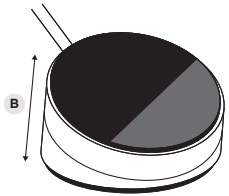

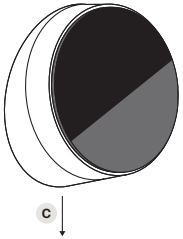

Compliance

CALIFORNIA PROPOSITION 65 WARNING

⚠ WARNING: This product can expose you to chemicals including styrene, which is known to the State of California to cause cancer. For more information, go to **www.P65Warnings.ca.gov**.

QUILT DIAL & CSA UL 60730 COMPLIANCE INFORMATION

RATING	VALUE
Purpose of Control	Operating Control
Pollution Degree	2 (Indoor Use Only)
NEC Class	For use in Class 2 circuits only
Rated Impulse Voltage	330 V
Control Construction	Independently Mounted Control
Action	Type 1 (No safety critical functions)
Operating Ambient Temperature	0 - 40°C
Max Temperature of the Mounting Face	42.8°C

FCC COMPLIANCE STATEMENT

FCC-ID (Dial): 2BFSB-DG100
FCC-ID (Sense): 2BFSB-SG100
Contains FCC-ID (Dial & Sense): XPYMAYAW2B

Quilt Systems Inc.
1800 Broadway, Suite 2
Redwood City, CA 94063 USA

Declare under our sole responsibility that:

Quilt's heat pump system complies with part 15 of the FCC Rules. Operation is subject to the following two conditions: (1) this device may not cause harmful interference. and (2) this device must accept any interference received, including interference that may cause undesired operation. Changes or modifications not expressly approved by the party responsible for compliance could void the user's authority to operate the equipment.

This equipment has been tested and found to comply with the limits for a Class B digital device pursuant to Part 15 of the FCC rules. These limits are designed to provide reasonable protection against harmful interference when the equipment is operated in a residential environment. This equipment generates, uses, and can radiate radio frequency energy and, if not installed and used in accordance with the instruction manual, may cause harmful interference to radio communications.

However, there is no guarantee that interference will not occur in a particular installation. If this equipment does cause harmful interference to radio or television reception, which can be determined by turning the equipment off and on, the user is encouraged to try to correct the interference by one or more of the following measures:

- Reorient or relocate the receiving antenna.
- Increase the separation between the equipment and receiver.
- Connect the equipment into an outlet on a circuit different from that to which the receiver is connected.
- Consult Quilt or an experienced radio/TV technician for help.

CANADA COMPLIANCE STATEMENT

This device meets the IC requirements for RF exposure in public or uncontrolled environments.

Cet appareil est conforme aux conditions de la IC en matière de RF dans des environnements publics ou incontrôlée.

This device contains license-exempt transmitter(s)/receiver(s) that comply with Innovation, Science and Economic Development Canada's license-exempt RSS(s).

Cet appareil est conforme avec Industrie Canada RSS standard exempts de licence(s).

Operation is subject to the following two conditions: (1) This device may not cause interference. (2) This device must accept any interference, including interference that may cause undesired operation of the device.

L'exploitation est autorisée aux deux conditions suivantes : 1) L'appareil ne doit pas produire de brouillage; 2) L'appareil doit accepter tout brouillage radioélectrique subi, même si le brouillage est susceptible d'en compromettre le fonctionnement.

CAN ICES-003 (B)/NMB-003(B)

This Class B digital device complies with Canadian ICES-003. Cet appareil numérique de la classe B est conforme à la norme NMB-003 du Canada.

RF EXPOSURE STATEMENT

This product meets international guidelines for exposure to radio waves

This device contains a radio transmitter and receiver. It is designed not to exceed the limits for exposure to radio frequency energy. These limits are set by public authorities such as the Federal Communications Commission (FCC), or by the Innovation, Science and Economic Development Canada (ISED) and include safety margins designed to assure the protection of all persons, regardless of age and health.

Quilt's heat pump system has been tested and meets applicable limits for radio frequency (RF) exposure. This equipment should be installed and operated with a minimum distance of 20 cm between the radiator and your body.

ACCESSING THE COMPLIANCE INFORMATION ON THE QUILT DIAL

Since the Quilt Dial has a screen, you may access the compliance information via the menu system. The steps are as follows:

1. Swipe up from the Main Room menu to get to the Dial Info screen.
2. Tap on the “Legal and Regulatory” linked label.
3. Swipe down to see all of the regulatory text including the FCC ID and FCC warning statement.

WARRANTY STATEMENT

If you change or modify the equipment it may void your product warranty. Please refer to quilt.com/warranty for full details.